STANSON

2N7002

N Channel Enhancement Mode MOSFET

300mA

PIN CONFIGURATION
SOT-23

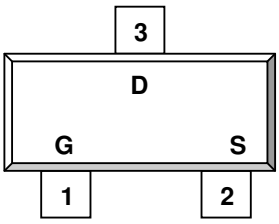

1.Gate 2.Source 3.Drain

FEATURE

- 60V/0.30A, $R_{DS(ON)}$ = 5Ω @V_{GS} = 10V(Typ.)
- 60V/0.25A, $R_{DS(ON)}$ = 7Ω@V_{GS} = 4.5V
- Super high density cell design for extremely low $R_{DS(ON)}$
- Exceptional on-resistance and Maximum DC current capability
- SOT-23 package design

PART MARKING
SOT-23

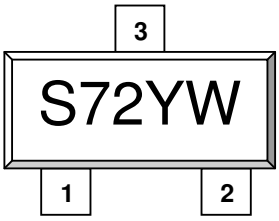

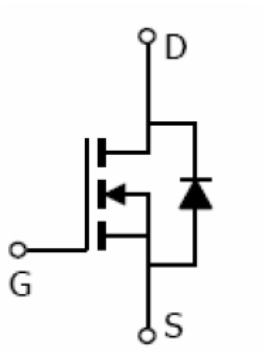

Y : Year Code W : Process Code

120 Bentley Square, Mountain View, Ca 94040 USA
www.stansontech.com

ABSOULTE MAXIMUM RATINGS (Ta = 25℃ Unless otherwise noted)

Parameter		Symbol	Typical	Unit
Drain-Source Voltage		V_{DSS}	60	V
Gate-Source Voltage		V_{GSS}	±20	V
Continuous Drain CurrentTJ=150℃)	T_A=25℃	I_D	0.3	A
Pulsed Drain Current		I_{DM}	1.0	A
Power Dissipation	T_A=25℃	P_D	0.35	W
Operation Junction Temperature		T_J	150	℃
Storgae Temperature Range		T_{STG}	-55/150	℃
Thermal Resistance-Junction to Ambient		$R_{\theta JA}$	375	℃/W

120 Bentley Square, Mountain View, Ca 94040 USA
www.stansontech.com

ELECTRICAL CHARACTERISTICS (Ta = 25℃ Unless otherwise noted)

Parameter	Symbol	Condition	Min	Typ	Max	Unit
Static						
Drain-Source Breakdown Voltage	$V_{(BR)DSS}$	V_{GS}=0V,I_D= 250uA	60			V
Gate Threshold Voltage	$V_{GS(th)}$	V_{DS}=VGS,I_D= 250uA	0.8		2.5	V
Gate Leakage Current	I_{GSS}	V_{DS}=0V,V_{GS}=±12V			±100	nA
Zero Gate Voltage Drain Current	I_{DSS}	V_{DS}= 45V,V_{GS}=0V			1	uA
		V_{DS}= 45V,V_{GS}=0V T_J=125℃			10	
On-State Drain Current On-State Drain Current (plsed)	$I_{SD(on)}$ $I_{SDM(2)}$				0.35 1.4	A
Drain-source On-Resistance	$R_{DS(on)}$	V_{GS}=10.0V,I_D=0.50A V_{GS}=4.5V,I_D= 0.25A		2.50 3.30	6.0 7.0	Ω
Forward Transconductance	$G_{fs(1)}$	V_{DS}=10V,I_D= 0.5A		0.6		S
Diode Forward Voltage	$V_{SD(1)}$	I_S=0.12A,V_{GS}=0V		0.85	1.5	V
Dynamic						
Total Gate Charge	Q_g	V_{DS}=30V, V_{GS}=4.5V I_D≡1.0A		1.4	2.0	nC
Gate-Source Charge	Q_{gs}			0.8		
Gate-Drain Charge	Q_{gd}			0.5		
Input Capacitance	Ciss	V_{DS}=25V, f=1MHz, V_{GS}=0		43		pF
Output Capacitance	Coss			20		
Reverse Transfer Capacitance	Crss			6		
Turn-On Time	$t_{d(on)}$ tr	V_{DD}=30V I_D=0.5A V_{GS}=4.5V R_G=4.7Ω		6 15		nS
Turn-Off Time	$t_{d(off)}$ tf			6 7	13 9	

120 Bentley Square, Mountain View, Ca 94040 USA
www.stansontech.com

TYPICAL CHARACTERICTICS (25℃ Unless noted)

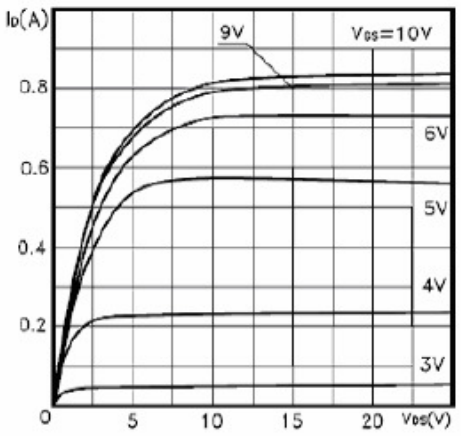

Output Characteristics

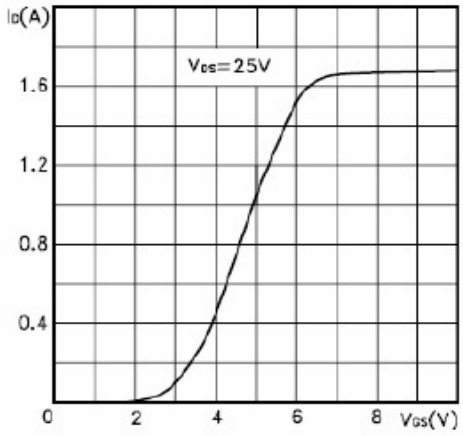

Transfer Characteristics

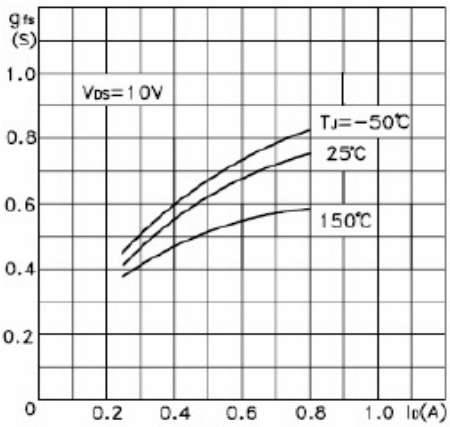

Transconductance

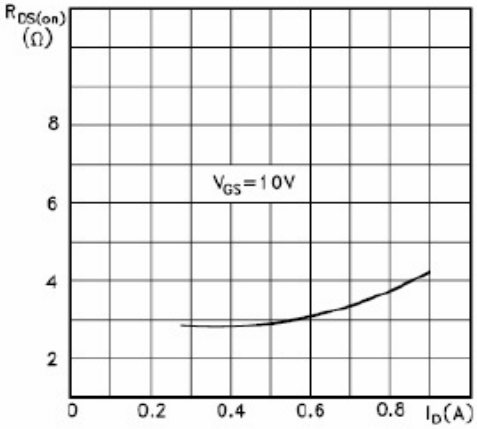

Static Drain-source On Resistance

120 Bentley Square, Mountain View, Ca 94040 USA
www.stansontech.com

TYPICAL CHARACTERICTICS

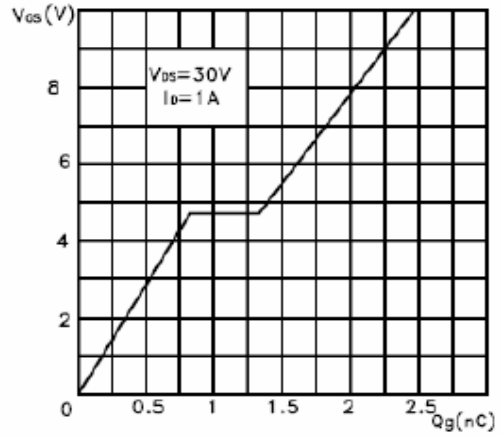

Gate Charge vs Gate-source Voltage

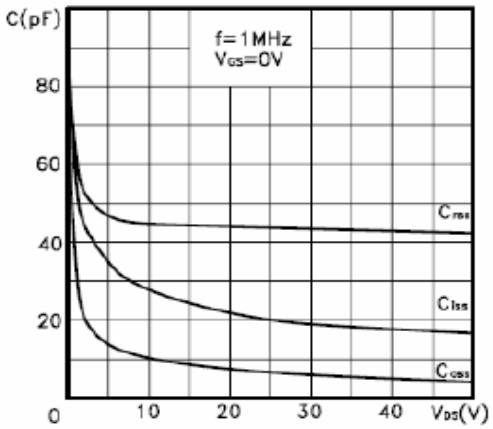

Capacitance Variations

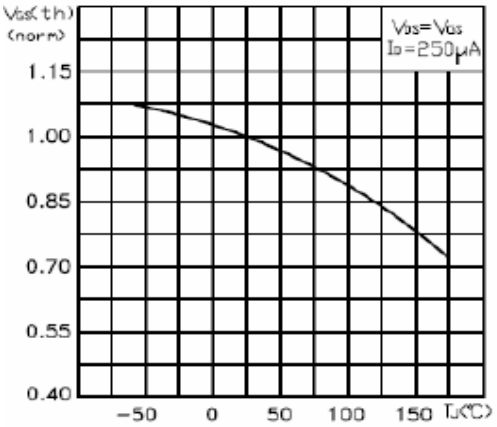

Normalized Gate Threshold Voltage vs Temperature

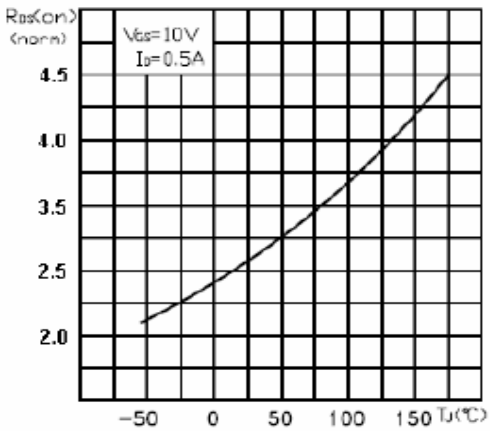

Normalized On Resistance vs Temperature

120 Bentley Square, Mountain View, Ca 94040 USA
www.stansontech.com

TYPICAL CHARACTERICTICS

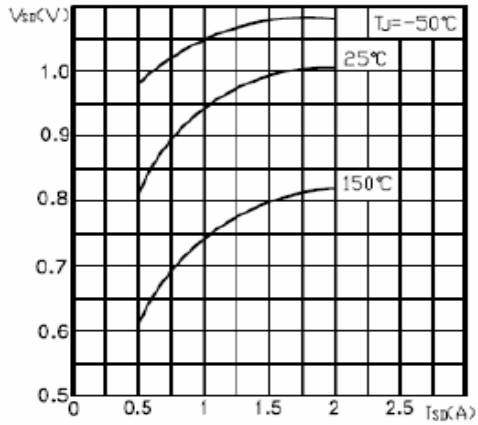

Source-Drain Forward

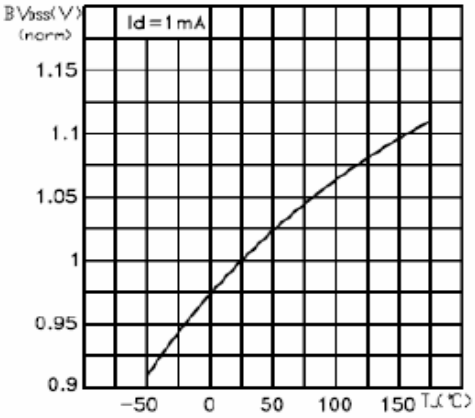

Normalized BVDSS vs Temperature

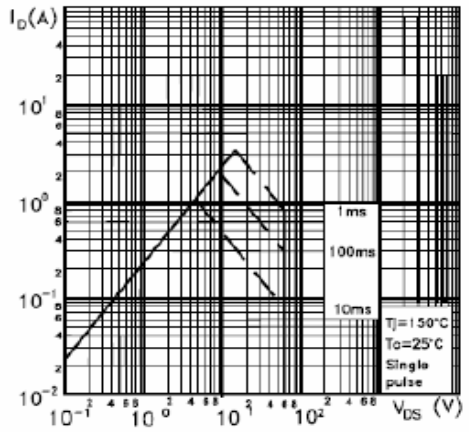

Safe Operating Area

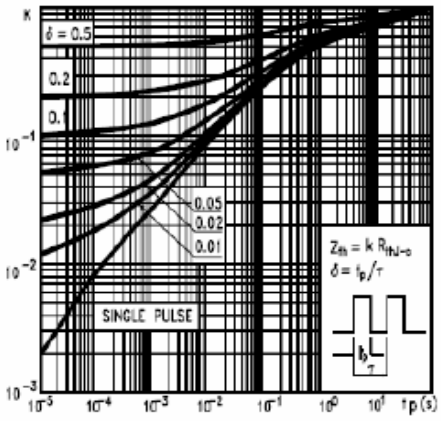

Thermal Impedance

120 Bentley Square, Mountain View, Ca 94040 USA
www.stansontech.com

TIPYCAL TESTING CIRCUIT

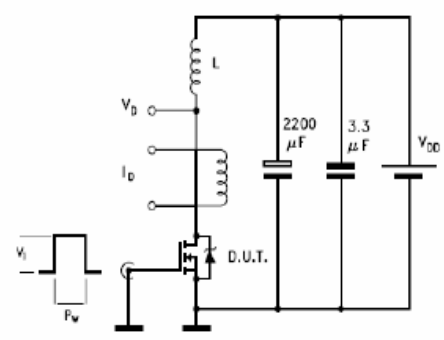

Unclamped Inductive Load Test

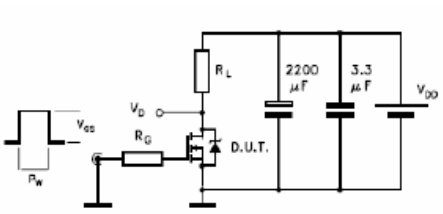

Switching Times Test Circuit

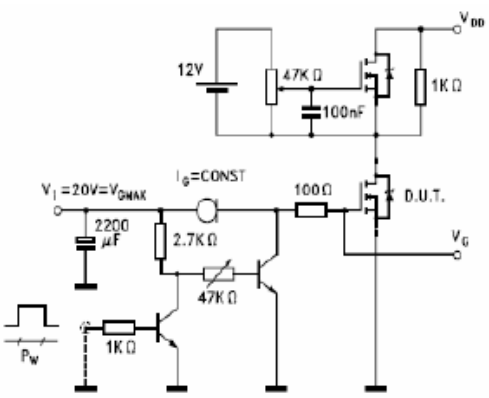

Gate Charge Test Circuit

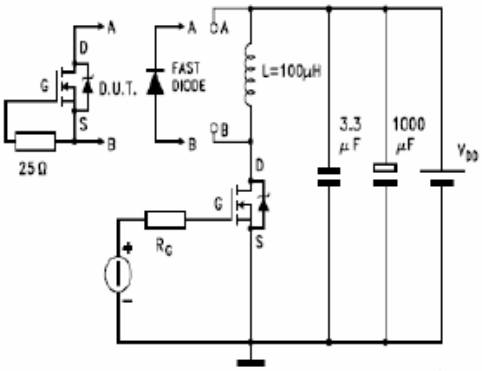

Test Circuit For Inductive Load Switching and Diode Recovery Times

120 Bentley Square, Mountain View, Ca 94040 USA
www.stansontech.com

SOT-23 PACKAGE OUTLINE

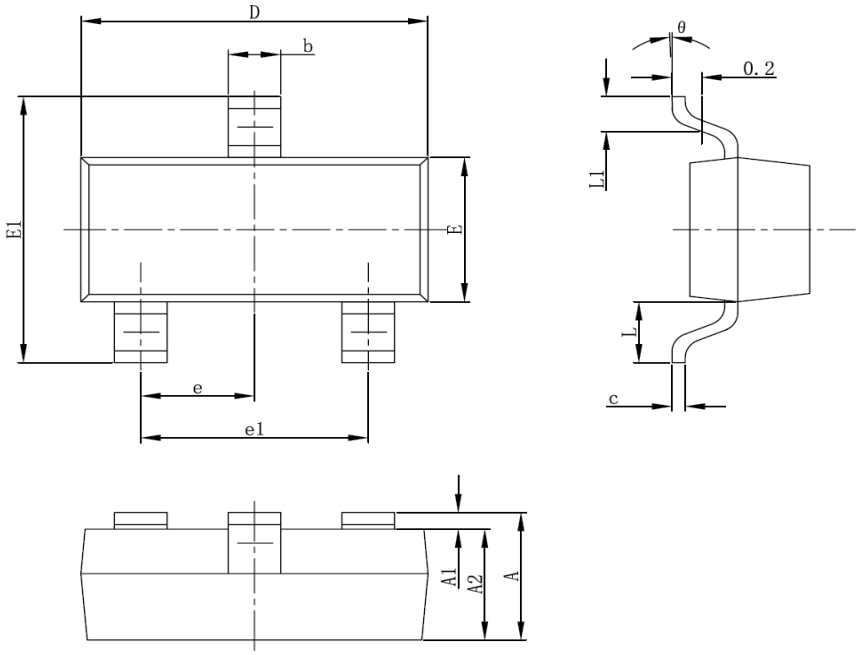

Symbol	Dimensions In Millimeters		Dimensions In Inches	
	Min	Max	Min	Max
A	0.900	1.100	0.035	0.043
A1	0.000	0.100	0.000	0.004
A2	0.900	1.000	0.035	0.039
b	0.300	0.500	0.012	0.020
c	0.080	0.150	0.003	0.006
D	2.800	3.000	0.110	0.118
E	1.200	1.400	0.047	0.055
E1	2.250	2.550	0.089	0.100
e	0.950TYP		0.037TYP	
e1	1.800	2.000	0.071	0.079
L	0.550REF		0.022REF	
L1	0.300	0.500	0.012	0.020
θ	0°	8°	0°	8°

120 Bentley Square, Mountain View, Ca 94040 USA
www.stansontech.com